GPON OLT BOSA

Features

- Data rate 1.25G/2.5G
- Operation temperature -40~85°C
- RoHS compliance
- SC receptacle
- Mechanical design suitable for SFP/SFP+/QSFP etc.

Standard Parts

No.	Name	Model	Rate	Temperature (°C)	Output power 25°C,Iop=Ith+20mA	Wavelength	Interface	Stitching	Chip type
1	GPON OLT BOSA	ABSV14DM	TX 2.5G RX 1.25G	-40~85°C	2.5~4mW	TX:1490/RX:1310	SC	4PIN/5PIN	DFB+APD

Dimensions and Pinouts

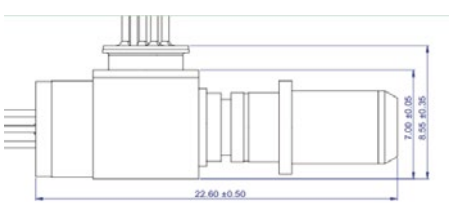

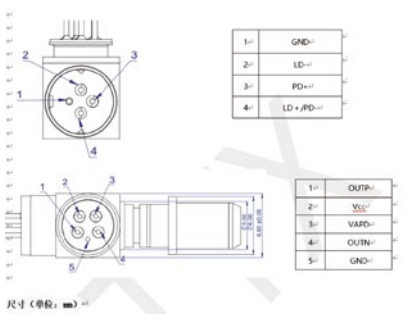

XGPON OLT BOSA

Features

- Data rate 2.5G/10G
- Operation temperature -40~85°C
- RoHS compliance
- SC receptacle
- Mechanical design suitable for SFP/SFP+/QSFP etc.

Standard Parts

No.	Name	Model	Rate	Temperature (°C)	TX_(dBm) If=Iop=95mA,Top=45°C, Vea=-0.5V	Wavelength	Interface	Stitching	Chip type
1	XGPON OLT BOSA	ABSC77EM	TX 10G RX 2.5G	-40~85°C	0.63~1.25mW	TX:1577/RX:1270	SC	7PIN/5PIN	EML+APD
2	XGSPON OLT BOSA	ABSC77EM	TX 10G RX 10G	-40~85°C	2.5~4.5dBm	TX:1577/RX:1270	SC	7PIN/6PIN	EML+APD

Dimensions and Pinouts

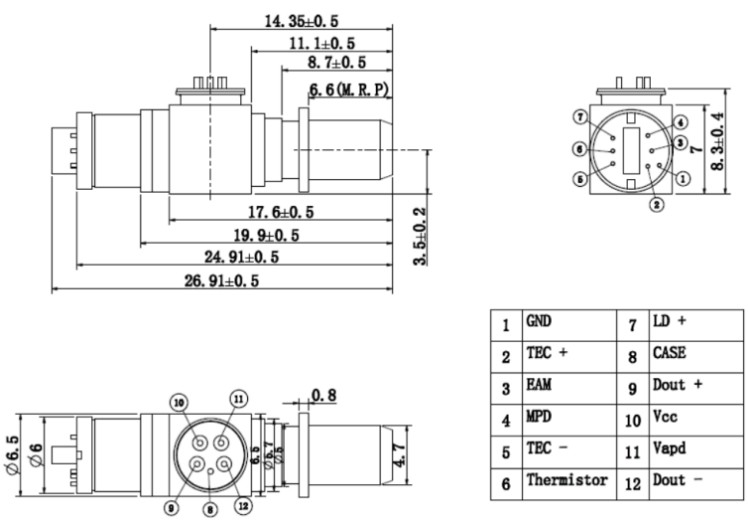

1	GND	7	LD +
2	TEC +	8	CASE
3	EAM	9	Dout +
4	MPD	10	Vcc
5	TEC −	11	Vapd
6	Thermistor	12	Dout −

XGPON&GPON OLT BOSA

Features

- Data rate 1.25G/2.5G/10G/50G
- Operation temperature -40~85°C
- RoHS compliance
- SC receptacle
- Mechanical design suitable for SFP/SFP+/QSFP etc.

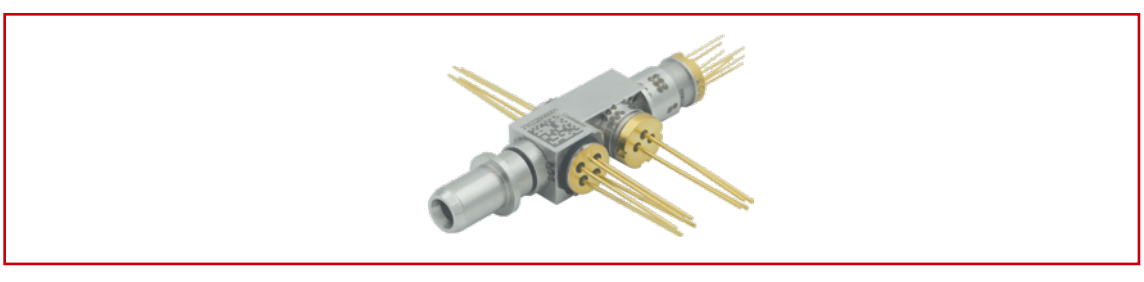

Standard Parts

No.	Name	Model	Rate	Temperature (°C)	TX_(dBm) If=Iop=95mA,Top=45°C, Vea=-0.5V	Wavelength	Interface	Stitching	Chip type
1	XGPON&GPON OLT BOSA COMB PON OLT BOSA	ABSC77EM	TX 10G+2.5G RX 2.5G+1.25G	-40~85°C	2.5mW~6mW	TX:1577+1490 RX:1270+1310	SC	7PIN/4PIN /5PIN	EML+DFB +APD
2	XGPON&GPON OLT BOSA COMB PON OLT BOSA	ABSC34EM	TX 50G+10G+2.5G RX 25G+2.5G+1.25G	-40~85°C	2dBm~5dBm	TX:1342+1577+1490 RX:1286+1270+1310	SC	7PIN/4PIN /5PIN/6PIN	EML+DFB +APD

Dimensions and Pinouts

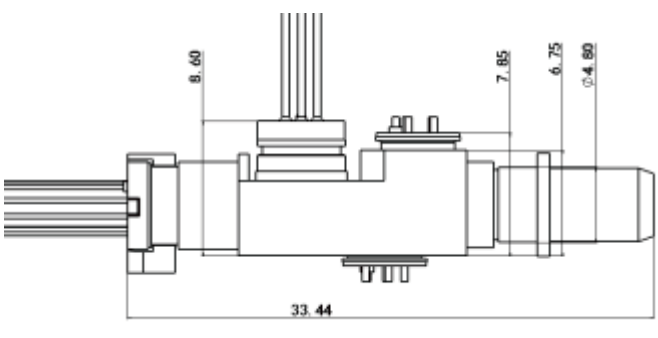

GPON ONU BOSA

Features

- Data rate: 1.25G/2.5G/10G
- Operating temperature range: -40~85°C
- RoHS compliant
- SC Pigtail

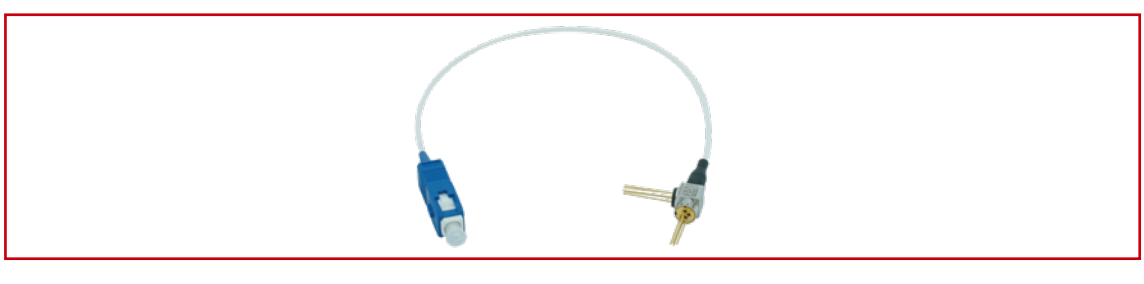

Standard Parts

No.	Name	Model	Rate	Temperature (°C)	Output power Iop=Ith+20mA	Wavelength	Interface	Stitching	Chip type
1	GPON ONU BOSA	ABSW13DV	TX 1.25G /RX 2.5G	-40~85	1.4 mW ~3.5 mW	TX:1310/RX:1490	SC Pigtail	4PIN/5PIN	DFB+APD
2	XGPON ONU BOSA	ABCV27DV	TX 2.5G /RX 10G	-40~85	＞1.8mW	TX:1270/RX:1577	SC Pigtail	4PIN/5PIN	DFB+APD
3	XGSPON ONU BOSA	ABSC27DV	10G	-40~85	2.5mW~5mW	TX:1270/RX:1577	SC Pigtail	4PIN/6PIN	DFB+APD
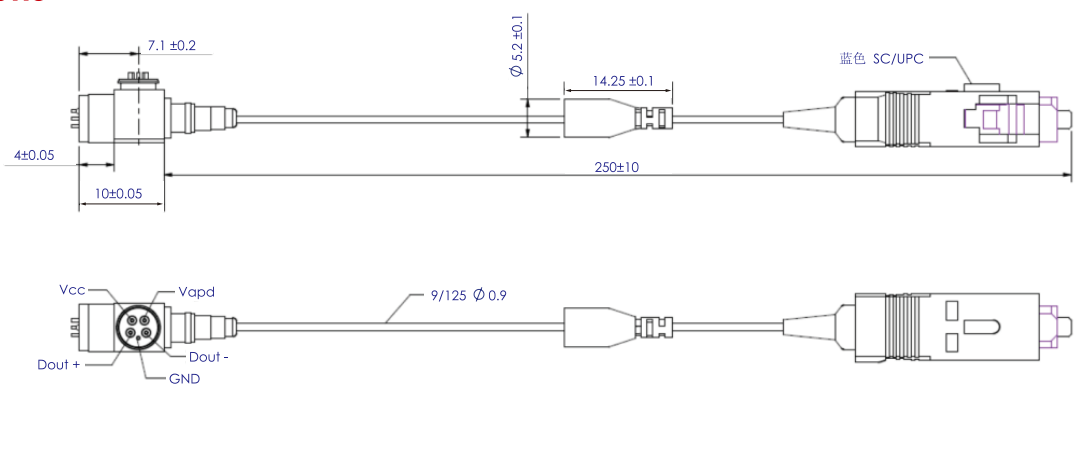
Dimensions